REVISIONS			
REV	DESCRIPTION	DATE	APP'D
BA	ISSUED (ECO 33482)	6–11–03	C.N.
CA	ECO 36754 1 SCHEM WAS 35–003 2 SPEC.		
	WAS PFS 1795 PERFORMANCE	7–28–06	P.F.

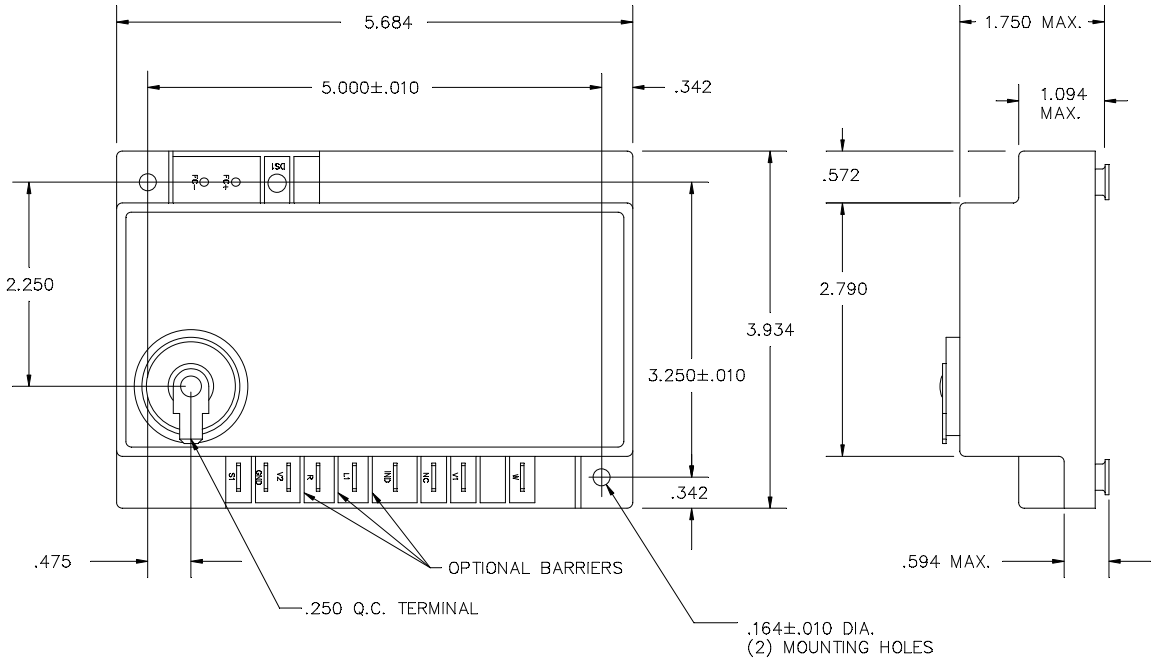

NOTES:

1. LINE VOLTAGE: 24 VAC, 50/60 Hz
   LIMITS OF 18 TO 30 VAC.
2. CONTACT RATING: 2A MAX. 24 VAC VALVE
   3 FLA (6 LRA) @ 120 VAC BLOWER
   1.5 FLA (3 LRA) @ 240 VAC BLOWER
3. TERMINALS:
   .250 Q.C. = W, NC, IND, L1, R
   .187 Q.C. = V1, V2, GND, S1
   .093 DIA. = FC+, FC–

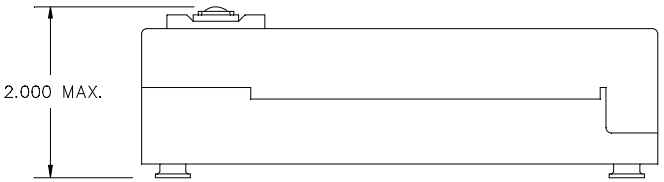

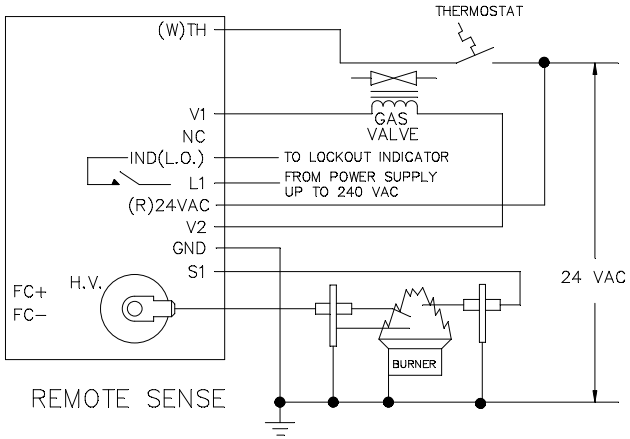

REMOTE SENSE

QTY	ITEM	PART NO.	DESCRIPTION	REMARK	ALTERNATE

This information is the property of KIDDE–FENWAL, INC. it is submitted in confidence and is not to be disclosed or utilized without written permission.

UNLESS OTHERWISE SPECIFIED DIMENSIONS ARE IN INCHES AND (MILLIMETERS)

TOLERANCES ON	
DECIMALS	MILLIMETERS
.XX = ±	.X = ±
.XXX = ±	.XX = ±
ANGLES ±	

FMF.

DR. ANDY W. 6–9–03
CHK. ANDY W. 6–9–03
MFG. W.H. 6–13–03
MATERIAL
FINISH
PROJ. NO.

Kidde Fenwal
Kidde-Fenwal, Inc.
400 Main Street
Ashland, MA 01721

TITLE
GAS IGNITOR
OUTLINE DRAWING

CODE IDENT NO.	SIZE	DWG. NO.	REV
OKDP7	C	35–615929–103	CA
SCALE 1:1	WT		SHEET 1 OF 1

SPEC.	TITLE	REV
FS 1080	FUNCTIONAL SPEC.	2
C35–058	SCHEMATIC	1

DO NOT CHANGE WITHOUT CONSIDERING AGENCY APPROVALS

FILE NAME = $(getvar, "dwgname")

DIMENSIONS IN PARENTHESES ARE MILLIMETER EQUIVALENTS.

DO NOT SCALE DRAWING